REV	Description	Date
A00	First Issue	2002-MAR-11

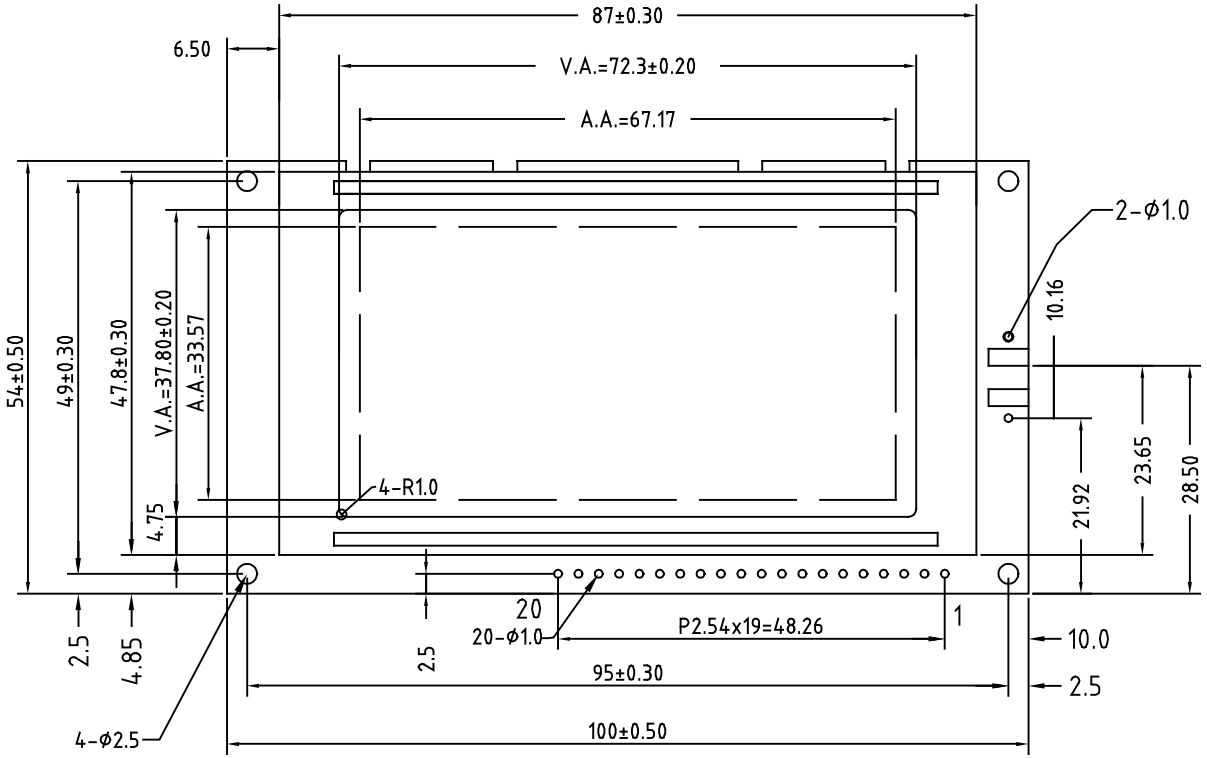

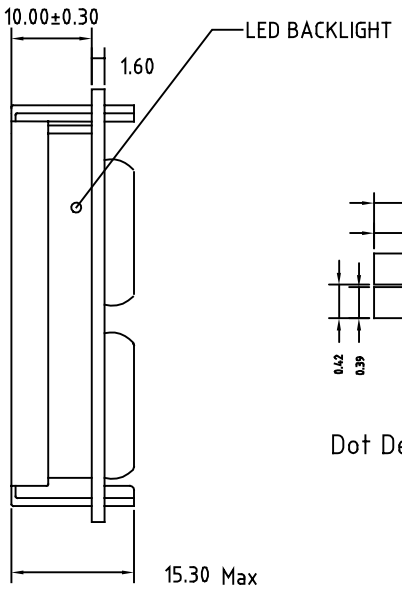

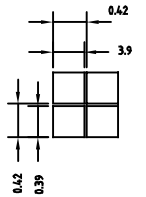

Dot Details

PIN NO	1	2	3	4	5	6	7 - 14	15	16	17	18	19	20
NAME	VSS	VDD	VADJ	RS	R/W	E	DB0 ~ DB7	CS	RES	VLCD	NC	LED+	LED-

Controller: Sanyo LC7981

Description:	Mechanical Drawing		
Scale:		TRI-T COMPANY LIMITED	
Sheet : 1 of 1			
Unspecified Tol. ±0.3	Unit mm		
Approvals	Date	Project Number TMBG16080-XX	Item Number
Draw:			
Check:			
Approve:		Do Not Scale This Drawing	Projection